PROJECT NO.	YEAR	SHEET NO.
	1996	

REVISIONS

NO.	DATE	BY	BRIEF DESCRIPTION
1	6-10-96	BRB	NEW METRIC STANDARD

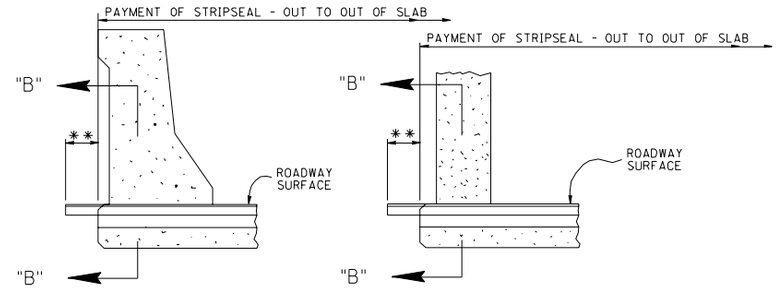

(BRIDGES WITHOUT SIDEWALKS OR CURBS)

DETAIL OF PARAPET EXPANSION DEVICE

DETAIL OF BRIDGE RAIL EXPANSION DEVICE

** DENOTES: MEMBRANE RETAINER WITHOUT LEGS (NON CROSS-HATCHED AREA OF ALTERNATE 1 RETAINER) TO EXTEND 150 mm BEYOND DECK SLAB ON LOW SIDE OF JOINTS.

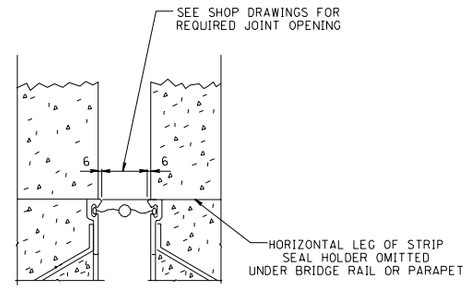

SECTION "B"-"B"

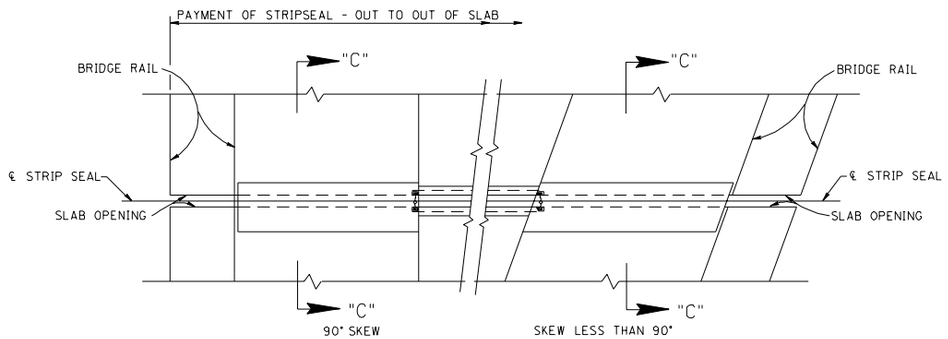

PLAN VIEW OF PARAPET OR OTHER SOLID CONCRETE BRIDGE RAIL

(BRIDGES WITH CURB OR SIDEWALK)

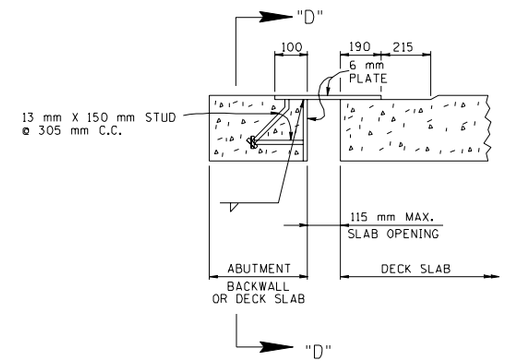

SECTION "C"-"C"

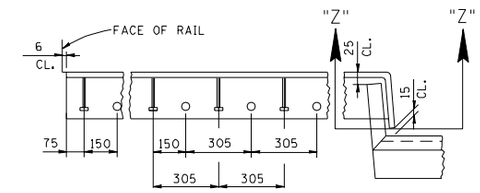

SECTION "D"-"D"
(SHOWING STUD SPACING)

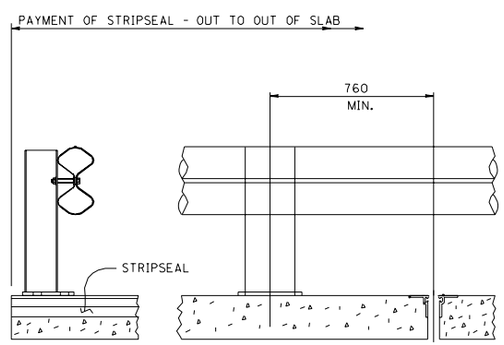

TYPICAL SECTION OF EXPANSION DEVICE

(WHEN USED WITH METAL RAIL)

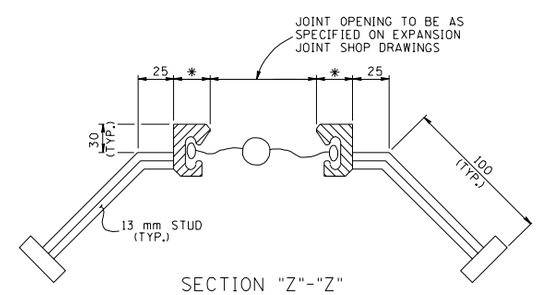

SECTION "Z"-"Z"

(SHOWING TURN UP IN CURBS & SIDEWALKS)

* DENOTES: DIMENSION SAME AS EXTRUSION FOR ALTERNATE 1 MEMBRANE RETAINER.

ALL UNITS ARE IN MILLIMETERS UNLESS NOTED OTHERWISE.

M/R MINOR REVISION - FHWA APPROVAL NOT REQUIRED

STATE OF TENNESSEE
DEPARTMENT OF TRANSPORTATION

STRIPSEAL EXPANSION JOINT NEW CONSTRUCTION 1996

DESIGNED BY _____ DATE _____
DRAWN BY D. HAMPTON DATE 1-89
SUPERVISED BY _____ DATE _____
CHECKED BY _____ DATE _____

CORRECT Edward P. Wasserman
ENGINEER OF STRUCTURES

METRIC

SHEET 2 OF 2
STDM-3-2